120W High Reliable 250~1500Vdc Ultra Wide Input DIN Rail Type DC-DC Converter **DDRH-120 series**

User's Manual

UL1741 BS EN/EN62109-1 TPTC004 IEC62109-1

PV Renewable Energy Automate Industrial Security Network Telecom

## Features

- 250~ 1500Vdc 6:1 ultra-wide input range
- Withstand 1700Vdc surge input for 10 seconds
- 63mm slim width
- 4KVac I/O high isolation(Reinforced isolation)
- Protections: Short circuit / Overload / Over voltage / Over temperature
  DC input under voltage / DC input reverse polarity
- Fanless design, cooling by free air convection
- Can be installed on DIN rail TS-35/7.5 or 15
- -40~+80°C ultra-wide operating temperature ( > +50°C derating)
- Over voltage category II
- Operating altitude up to 5000 meters
- DC OK relay contact
- DC output voltage adjustable(12~15V, 24~29V, 30~36V, 48~58V)
- Conformal coating
- 3 years warranty

## Applications

- Photovoltaic power generation
- Renewable energy system
- High voltage freqency conversion
- Industrial control system
- Semiconductor fabrication equipment
- Electro-mechanical apparatus
- DC bus centralized application
- Energy storage system(ESS)
- Charging pile
- Third rail

## GTIN CODE

MW Search: https://www.meanwell.com/serviceGTIN.aspx

## Description

DDRH-120 series is a 250 ~ 1500Vdc high reliable ultra-high input DIN rail type DC-DC converter which can supply stable working voltage for the load. It is suitable to be mounted on TS-35/7.5 or 15 rails. Main features are as following: easy to install DIN rail type, narrow width(63mm) in slim design, -40~+80° C wide range operating temperature, 4KVac high isolation voltage, operation at 5000m altitude, high efficiency, low ripple & noise, complete protections and so on.

DDRH-120 is compliant with UL1741 and BS EN/EN61000-6-2 standard regarding immunity for industrial environments. It is suitable for industrial automation, surveillance, telecommunication and can be widely deployed in the applications of new energy generation such as solar power, and windmill power generation, for instances, photovoltaic power systems, high voltage inverting , DC bus centralized application, ESS, charging pile, railway and so forth.

## Model Encoding

**DDRH - 120 - 24**

- 24 → Output voltage(12V/24V/32V/48V)
- 120 → Rated wattage
- DDRH → Series name

## SPECIFICATION

| MODEL | | | DDRH-120-12 | DDRH-120-24 | DDRH-120-32 | DDRH-120-48 |
|---|---|---|---|---|---|---|
| OUTPUT | DC VOLTAGE | | 12V | 24V | 32V | 48V |
| | RATED CURRENT | | 8.4A | 5A | 3.75A | 2.5A |
| | CURRENT RANGE | | 0 ~ 8.4A | 0 ~ 5A | 0 ~ 3.75A | 0 ~ 2.5A |
| | RATED POWER | | 100.8W | 120W | 120W | 120W |
| | RIPPLE & NOISE (max.) Note.2 | | 120mVp-p | 240mVp-p | 240mVp-p | 300mVp-p |
| | VOLTAGE ADJ. RANGE | | 12 ~ 15V | 24 ~ 29V | 30 ~ 36V | 48 ~ 58V |
| | VOLTAGE TOLERANCE Note.3 | | ±1.5% | ±1.0% | ±1.0% | ±1.0% |
| | LINE REGULATION | | ±0.5% | ±0.5% | ±0.5% | ±0.5% |
| | LOAD REGULATION | | ±1.5% | ±1.5% | ±1.0% | ±1.0% |
| | EXTERNAL CAPACITANCE LOAD (Max.) | | 4000 μF | 2500 μF | 2000 μF | 1000 μF |
| INPUT | VOLTAGE RANGE Note.4 | | 250 ~ 1500Vdc | | | |
| | EFFICIENCY (Typ.) | 300Vdc | 88% | 89% | 90% | 91% |
| | | 800Vdc | 87% | 90% | 91% | 91% |
| | | 1500Vdc | 84% | 86% | 87% | 87% |
| | INRUSH CURRENT (max.) | | COLD START 300A /1500Vdc 200A/800Vdc 70A/250Vdc | | | |
| | EXTERNAL INPUT FUSE | | 4A/1500VDC, required(Please refer to page 4 for more details) | | | |
| PROTECTION | OVERLOAD | | 105 ~ 135% rated output power | | | |
| | | | Protection type : Hiccup mode when output voltage<55%, recovers automatically after condition is removed; Constant current limiting, recovers automatically after fault condition is removed within 55% ~ 100% rated output voltage | | | |
| | OVER VOLTAGE | | 16.5 ~ 21V | 33 ~ 42V | 40 ~ 48V | 62 ~ 70V |
| | | | Protection type : Hiccup mode, recovers automatically after fault condition is removed | | | |
| | OVER TEMPERATURE | | Protection type : Hiccup mode, recovers automatically after fault condition is removed | | | |
| | DC INPUT | REVERSE POLARITY | By internal Bridge Diode, no damage, recovers automatically after fault condition removed | | | |
| | | UNDER VOLTAGE LOCKOUT | Under voltage protection range:200 ~ 230Vdc , Under voltage release range:230 ~ 245Vdc | | | |
| FUNCTION | DC OK SIGNAL | | Relay contact rating(max.) : 30V / 1A resistive | | | |
| ENVIRONMENT | WORKING TEMP. | | -40 ~ +80℃ (Refer to "Derating Curve") | | | |
| | WORKING HUMIDITY | | 20 ~ 90% RH non-condensing | | | |
| | STORAGE TEMP., HUMIDITY | | -40 ~ +80℃, 10 ~ 95% RH non-condensing | | | |
| | TEMP. COEFFICIENT | | ±0.03%/℃ (0 ~ 50℃) | | | |
| | VIBRATION | | Component: 10 ~ 500Hz, 2G 10min./1cycle, 60min. each along X, Y, Z axes; Mounting clip: Compliance to IEC60068-2-6 | | | |
| | OPERATING ALTITUDE Note.5 | | 5000m | | | |
| | OVER VOLTAGE CATEGORY | | OVC II 2000m; According to EN62109-1 | | | |
| SAFETY & EMC (Note.7) | SAFETY STANDARDS | | UL1741, CSA C22.2 No.107.1-16 , IEC62109-1, BS EN/EN62109-1, EAC TP TC 004 approved | | | |
| | WITHSTAND VOLTAGE | | I/P-O/P:4KVAC I/P-FG :3.75KVAC O/P-FG :2KVAC O/P-DC OK:0.5KVAC | | | |
| | ISOLATION RESISTANCE | | I/P-O/P, 100M Ohms / 500VDC / 25℃/ 70% RH | | | |
| | EMC EMISSION | | **Parameter** | **Standard** | **Test Level / Note** | |
| | | | Conducted | BS EN/EN55032(CISPR32) | Class A | |
| | | | Radiated | BS EN/EN55032(CISPR32) | Class A | |
| | EMC IMMUNITY | | BS EN/EN55035, BS EN/EN61000-6-2 | | | |
| | | | **Parameter** | **Standard** | **Test Level /Note** | |
| | | | ESD | BS EN/EN61000-4-2 | Level 3, 8KV air; Level 2, 4KV contact, criteria A | |
| | | | Radiated Susceptibility | BS EN/EN61000-4-3 | Level 3, 10V, criteria A | |
| | | | EFT/Burest | BS EN/EN61000-4-4 | Level 3, 2KV, criteria A | |
| | | | Surge | BS EN/EN61000-4-5 | Level 4, 2KV/Vin+ ~ Vin-, 4KV/Vin ~ FG, criteria A | |
| | | | Conducted | BS EN/EN61000-4-6 | Level 3, 10V, criteria A | |
| | | | Magnetic Field | BS EN/EN61000-4-8 | Level 4, 30A, criteria A | |
| OTHERS | MTBF | | 257.2 hrs min. MIL-HDBK-217F (25℃); 1596.3 hrs min. Telcordia TR/SR-332 (Bellcore) (25℃) | | | |
| | DIMENSION | | 63*125.2*115mm (W*H*D) | | | |
| | PACKING | | 0.845Kg; 12pcs/12.6Kg/1.02CUFT | | | |
| NOTE | 1. All parameters NOT specially mentioned are measured at 800Vdc input, rated load and 25℃ of ambient temperature.<br>2. Ripple & noise are measured at 20MHz of bandwidth by using a 12" twisted pair-wire terminated with a 0.1μF & 47μF parallel capacitor.<br>3. Tolerance : includes set up tolerance, line regulation and load regulation.<br>4. Derating may be needed under low input voltage. Please check the derating curve for more details.<br>5. The ambient temperature derating of 3.5℃/1000m with fanless models and of 5℃/1000m with fan models for operating altitude higher than 2000m(6500ft).<br>6. Installation clearances : 40mm on top, 20mm on the bottom, 5mm on the left and right side are recommended when loaded permanently with full power. In case the adjacent device is a heat source, 15mm clearance is recommended.<br>7. The power supply is considered a component which will be installed into a final equipment. The final equipment must be re-confirmed that it still meets EMC directives. For guidance on how to perform these EMC tests, please refer to "EMI testing of component power supplies." (as available on https://www.meanwell.com//Upload/PDF/EMI_statement_en.pdf )<br>※ Product Liability Disclaimer : For detailed information, please refer to https://www.meanwell.com/serviceDisclaimer.aspx | | | | | |

## ■ Block Diagram

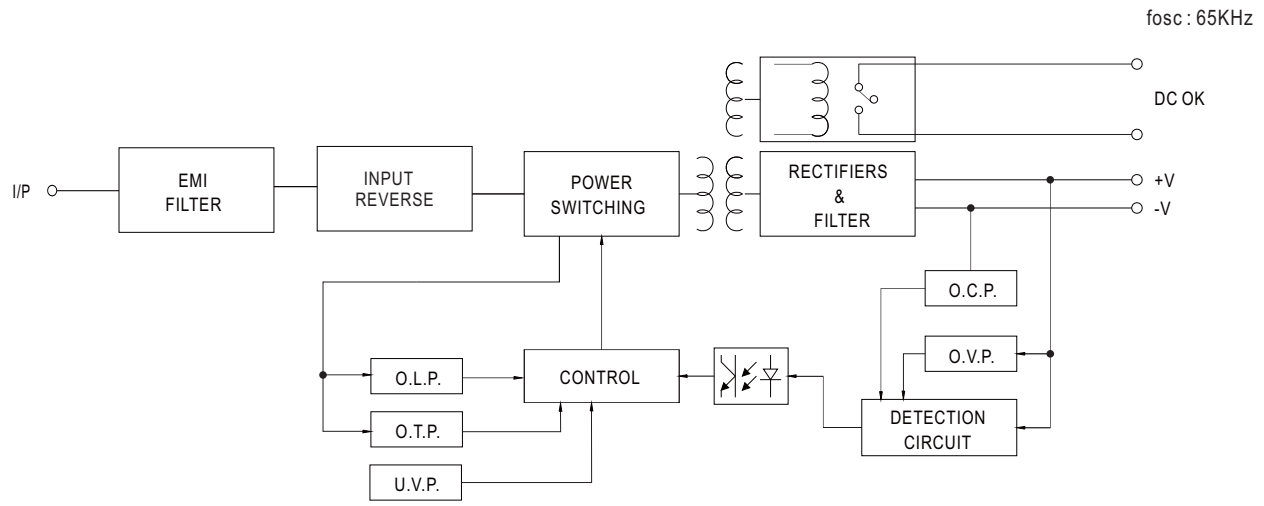


## ■ Derating Curve

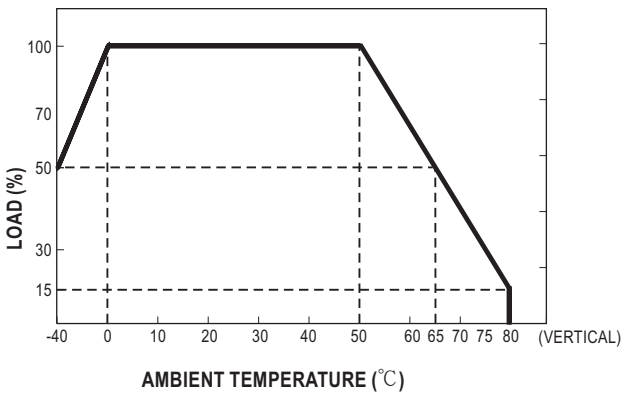


## ■ Static Characteristics

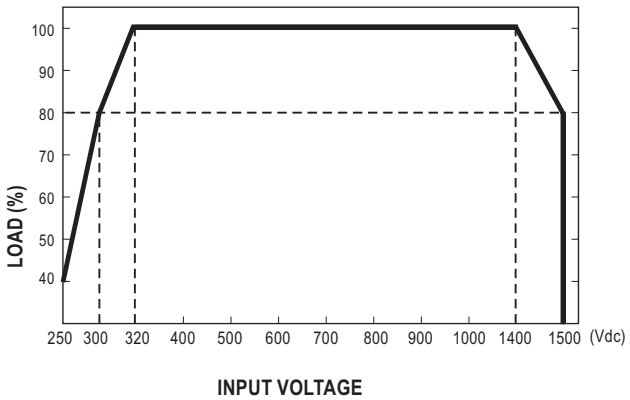


## ■ Altitude Curve

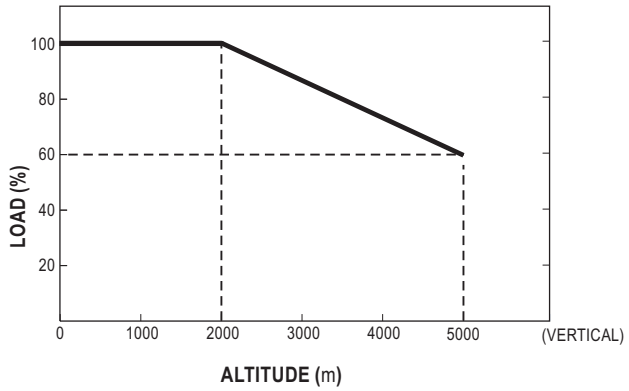


**Note: Multiply by the regular power limit factor**

## ■ DC OK Relay Contact

| | |
|---|---|
| Contact Close | PSU turns ON / DC OK. |
| Contact Open | PSU turns OFF / DC Fail. |
| Contact Ratings (max.) | 30V/1A resistive load. |

## ■ Mechanical Specification

Case No. Unit:mm

Terminal Pin No. Assignment (TB3)

| Pin No. | Assignment |
|---|---|
| 1,2 | DC OK Relay Contact |
| 3,4 | -Vo |
| 5,6 | +Vo |

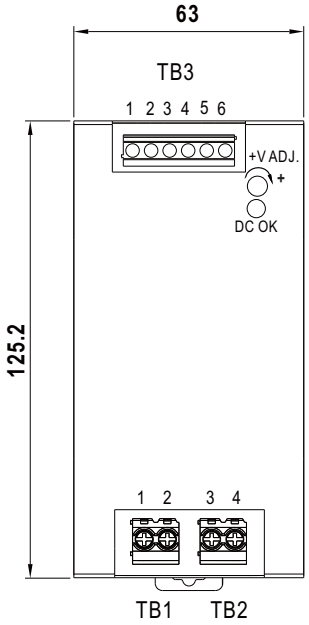


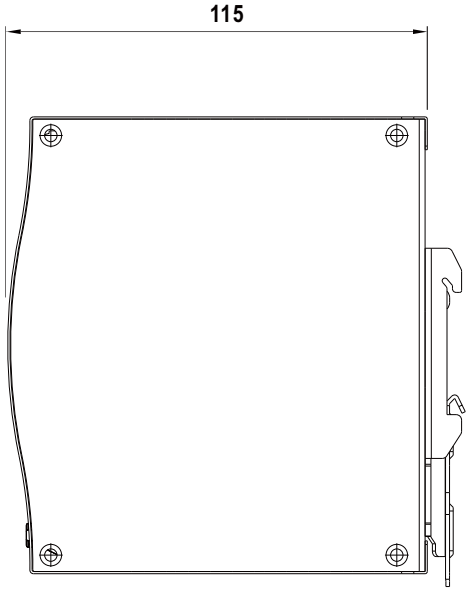


Terminal Pin No. Assignment (TB1,TB2)

| Pin No. | Assignment |
|---|---|
| 1,2 | -Vin |
| 3,4 | +Vin |

## ■ External FUSE wiring instruction

External FUSE is required.FUSE specification : 4A/1500Vdc.

Suggested model:

| Fuse Brand | Manufacturer Part NO. | | MW's Order NO. |
|---|---|---|---|
| | Fuse | Fuse Holder | Fuse + Fuse Holder |
| WalterFuse | WJ30-4 | WJ30-H | WJ30-4_WJ30-H |

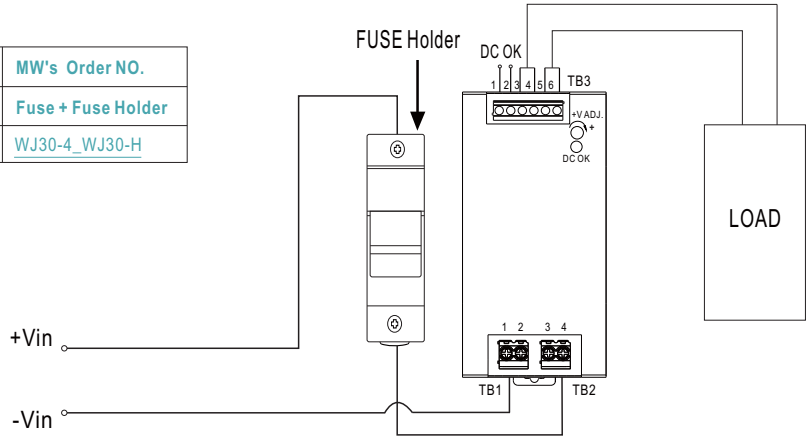

## ■ Installation Instruction

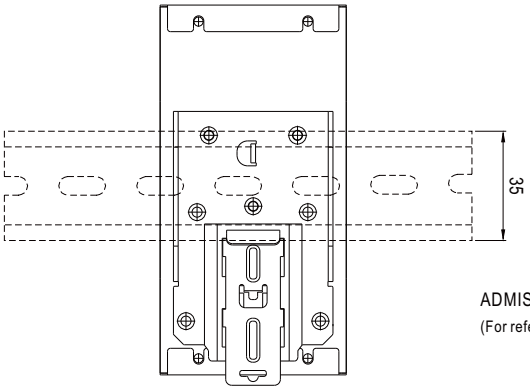


This series fits DIN rail TS35/7.5 or TS35/15.
For installation details, please refer to the Instruction manual.

ADMISSIBLE DIN rail:TS35/7.5 OR TS35/15
(For reference only. Not included with unit.)

## ■ Installation Manual

Please refer to : http://www.meanwell.com/manual.html